User's Guide
SLUU295–September 2007

UCD9112 Dual-Phase Synchronous Buck Digital Controller Evaluation Module

The UCD9112 is a synchronous buck digital PWM controller designed for point of load power applications. This device integrates dedicated circuitry for dc/dc loop management with a microcontroller core, flash memory and a PMBus™ interface. The UCD9112 does not require programming, and device parameters are configurable through the TI-Fusion-Digital-Power-Designer, a graphical user interface (GUI) configuration software program. The evaluation module (EVM) is a dual-phase, single rail converter with the capability of 40-A load current at nominal 1-V output. Throughout this document, the terms *evaluation board*, *evaluation module*, and *EVM* are synonymous with the UCD9112EVM. This user's guide also includes information regarding operating procedures and input/output connections, an electrical schematic, printed circuit board (PCB) layout drawings, and a parts list for the EVM.

Contents

1 Evaluation Kit Contents 2
2 Short Introduction to EVM Functionality 2
3 UCD9112EVM Electrical Performance Specifications 3
4 Inspection of UCD9112EVM 3
5 Installation of Fusion-Digital-Power-Designer 5
6 Test Setup 5
7 Test and Evaluation Procedures 8
8 UCD9112EVM Typical Performance Characteristics 12
9 UCD9112EVM Schematics 13
10 UCD9112EVM Silkscreen and PCB Layout 15
11 UCD9112EVM Bill of Materials 21
12 References 23

List of Figures

1 DC Input Power and Output Power Connection 6
2 Connection Between EVM and Host 7
3 Graphical User Interface (GUI) Display 8
4 Line Regulation 12
5 Load Regulation 12
6 Efficiency η vs I_{OUT} 12
7 Efficiency η vs V_{OUT} 12
8 Output Voltage Ripple 12
9 Load Transient Response 12
10 UCD9112EVM Schematic 13
11 UCD9112EVM Schematic 14
12 Top Layer Silkscreen 15
13 Bottom Layer Silkscreen 16
14 UCD9112EVM PCB Top Layer (Component Side) 17
15 UCD9112EVM PCB Layer 1 (Internal) 18
16 UCD9112EVM PCB Layer 2 (Internal) 19
17 UCD9112EVM PCB Bottom Layer (Solder Side) 20

Windows is a registered trademark of Microsoft Corporation.
PMBus is a trademark of System Management Interface Forum, Inc..
All other trademarks are the property of their respective owners.

1 Evaluation Kit Contents

The evaluation kit includes the following items:

1. UCD9112 dual phase point of load EVM
2. Universal serial bus (USB) interface adapter
3. Ribbon cable
4. USB cable
5. CD including the *TI-Fusion-Digital-Power-Designer* program and references
6. User's guide (this document)

2 Short Introduction to EVM Functionality

The UCD9112EVM board is designed for 40-A synchronous buck converters. The output voltage range is from 0.4 V to 4 V. The operating input voltage range is from 5 V to 14 V. The UCD9112EVM is able to regulate output voltage, configure operation parameters, monitor the power-supply status, and communicate with the host through the *Fusion-Digital-Power–Designer* GUI.

2.1 Features

- 5-V to 14-V input voltage range
- 0.4-V to 4-V configurable output voltage range
- Dual phase with maximum 40-A output current
- Implementation of PMBus commands
- Configurable software GUI
- Digital Port_ID (PID) compensation
- Convenient test points

2.2 Applications

- Telecommunication equipment
- Server power
- Networking equipment
- Datacom
- DC power distributed systems
- Storage systems

3 UCD9112EVM Electrical Performance Specifications

Table 1. UCD9112EVM Electrical Performance Specification Summary

PARAMETER	TEST CONDITIONS	UCD9112EVM			UNIT
		MIN	TYP	MAX	
INPUT CHARACTERISTICS					
Input voltage range	I_{OUT} = 30 A, V_{OUT} = 1 V, T_A = +25°C	5	12	14	V
OUTPUT CHARACTERISTICS					
Output voltage range	V_{IN} = 12 V; I_{OUT} = 20 A	0.4	1.0	4	V
Output current	V_{IN} = 12 V; V_{OUT} = 1 V	0		40	A
Output voltage ripple	V_{IN} = 12 V; BW = 20 kHz; I_{OUT} = 30 A		±10		mV
Undershoot/overshoot	V_{OUT} = 1 V, V_{IN} = 12 V, SR = 2.5 A/µs,10 A-30 A-10 A		±30		mV
Recovery time			30		µs
Setting accuracy	V_{IN} = 12 V, V_{OUT} = 1 V, I_{OUT} = 10 A		±0.5%		
Load regulation	V_{IN} = 12 V, V_{OUT} = 1 V (from 0 A to 40 A)		±5		mV
Line regulation	V_{OUT} = 1 V, I_{OUT} = 20 A (from 5 V to 14 V)		±2		mV
Phase current balancing	V_{OUT} = 1 V, I_{OUT} = 30 A; phase current difference		1.5		A
SYSTEM CHARACTERISTICS					
Efficiency	V_{IN} = 12 V, V_{OUT} = 1 V, I_{OUT} = 30 A, f_{SW} = 500 kHz		85		%
Switching frequency	V_{IN} = 12 V, V_{OUT} = 1 V		500		kHz
Operating temperature range	V_{IN} from 5 V to 14 V, V_{OUT} = 1 V, I_{OUT} = 40 A	–40		+85	C

4 Inspection of UCD9112EVM

4.1 Description of Jumpers

Table 2. Description of EVM Jumpers

Reference Designator	Functions		Default Connection
J5	Pin 1 to Pin 2	Select 3.3 V from USB to the controller	
	Pin 3 to Pi n2	Select 3.3 V from UCD7230 to the controller	ü
J6	Pin 1 to Pin 2	Select 3.3 V from UCD7230 of Phase 1	
	Pin 3 to Pin 2	Select 3.3 V from UCD7230 of Phase 2	ü
J7	Pin 1 to Pin 2	Select regulator (8.0 V) to drive UCD7230 of Phase 2	
	Pin 3 to Pin 2	Select dc input power to drive UCD7230 of Phase 2	ü
J8	Pin 1 to Pin 2	Select regulator (8.0 V) to drive UCD7230 of Phase 1	
	Pin 3 to Pin 2	Select dc input power to drive UCD7230 of Phase 1	ü
J9	Pin 9 to Pin 10	Select control line to be used for PMBus	ü
J10	Pin 1 to Pin 2	Select internal USB 3.3 V as pull-up for power good	ü
	Pin 3 to Pin 2	Select external bias as pull-up for power good	

4.2 Description of Test Points

The EVM board contains several test points to allow users to measure input voltage, output voltages, pulse-wdith modulation (PWM) waveforms, apply tracking voltages, and for other evaluation purposes.

Table 3. Description of Test Points

Reference Designator	Symbol Name	Description
TP1	VIN	Input dc power plus polarity
TP2	PGND_IN	Input dc power ground
TP3	AO_2	Phase 2 current output from UCD7230
TP4	VOUT	Output dc power plus polarity
TP5	VOUT	Output voltage measurement (probe)
TP6	CLF_2	Phase 2 CLF from UCD7230
TP7	PGND_OUT	Output dc power ground
TP8	AO_1	Phase 1 current output from UCD7230
TP9	V_Track+	Parent voltage input for tracking
TP10	Rmt_Anode	Remote temperature sensing
TP11	Vrs+	Output voltage positive remote sensing
TP12	DATA	PMBus data line
TP13	CLK	PMBus clock line
TP14	Vrs-	Output voltage negative remote sensing
TP15	Alert	PMBus alert line
TP16	PGOOD	Internal open connector
TP17	DPWM_A0	DPWM for Phase 1 Upper FET
TP18	SR1	SRE for phase 1
TP19	DPWM_A1	DPWM for Phase 2 Upper FET
TP20	SR2	SRE for phase 2
TP21	V_PGOOD	External open connector
TP22	CLF_1	Phase 1 CLF from UCD7230
TP23	FAN_TACH	FAN TACH input for monitoring
TP24	GND	Signal ground
TP25	ILIM	Current limit to UCD7230 for peak current protection
TP26	FAN_PWM	FAN PWM output for speed drive

4.3 Description of LEDs

4.3.1 Input Power LED

The green LED (D1) is lit when the input voltage is sufficient to supply power for the EVM board. The operating input voltage range is from 5 V to 14 V.

4.3.2 USB LED

The green LED (D6) indicates that the PMBus is connected to the EVM board.

4.3.3 Alert LED

The red LED (D7) indicates when a fault has occurred. When faults occur, the EVM turns off. This LED is also lit if there are communication errors.

5 Installation of Fusion-Digital-Power-Designer

The GUI is a software application interface between the host computer and the EVM. The user must first install the software on a personal computer. Without the software, the EVM cannot communicate with the host. The GUI application firmware, *TI-Fusion-Digital-Power-Designer*, is located on the CD shipped with the kit. It can also be downloaded from the UCD9112 product folder on the TI web site (at www.ti.com). Copy the file to your computer and unzip it. Execute *TI-Fusion-Digital-Power-Designer xx.exe* (***xx*** is the firmware version) to start the installation. Follow the on-screen instructions to complete the installation.

Once the installation finishes, a shortcut with the GUI icon appears on the desktop. Refer to the *Fusion Digital Power Designer User Manual* for more information. The Manual is available for review when the software is first initialized; it is also available through the **Help** menu.

6 Test Setup

6.1 Recommended PC Workstation

The GUI software *TI-Fusion-Digital-Power-Designer* and the EVM hardware require the following workstation platform (host):

- A personal computer with Microsoft Windows® XP (or later) operating system
- At least one available USB port
- Microsoft .NET Framework version 2

Microsoft .NET is the runtime application framework that the GUI uses. The GUI installer checks to see if the PC has version 2.0 of .NET installed, and install it if necessary.

6.2 Recommended Test Equipment

6.2.1 DC Power Supply

The voltage range of the input power supply should be from 0 V to 15 V, and the maximum output current should be set to 20 A.

6.2.2 Load

If an electronic load is used as a constant current load, it should be rated to more than 40 A up to 5 V. A resistive load can also be used.

6.2.3 Meters and Shunt

- V1: input voltage meter, 0 V to 15 V
- V2: Output voltage meter, 0 V to 5 V

To measure input current and output current precisely, a current shunt is recommended. A third voltage meter, V3, measures the voltage across the shunt.

6.2.4 Oscilloscope

To measure output ripple and step response, an analog or digital oscilloscope is required. The scope probe should have 1-MΩ impedance, and the scope should be set for 20-MHz bandwidth.

6.2.5 Other Equipment

To test tracking, an additional dc power supply is needed.

To test fan functions, a PWM fan is needed. There are normally four terminals in a PWM fan: input power, ground, tach signal, and PWM input. More details can be found on the respective fan vendor product data sheet.

6.3 Equipment Connection

The basic test setup is shown in Figure 1. The EVM board should be used at an approved electrostatic discharge (ESD) workstation. Before powering on the EVM board, make sure that a wrist strap, boot straps, or mats are connected to reference the user to earth ground. ESD-rated smocks and safety glasses must also be worn.

6.3.1 Input Voltage Connection

There are four steps to complete the input connection. The input connection is shown in Figure 1.

Step 1. Before connecting the dc input power supply, make sure that V_{IN} is initially set to 0 V.

Step 2. For more accurate current measurement, it is recommended to use a current shunt to sense the input current. Connect the wire from the positive V_{IN} source to one end of the shunt, then connect the other end of the shunt to J1 with AWG #16 wire.

Step 3. Connect voltmeter V3 across the shunt.

Step 4. Connect J2 to the negative V_{IN} source with AWG #16 wire.

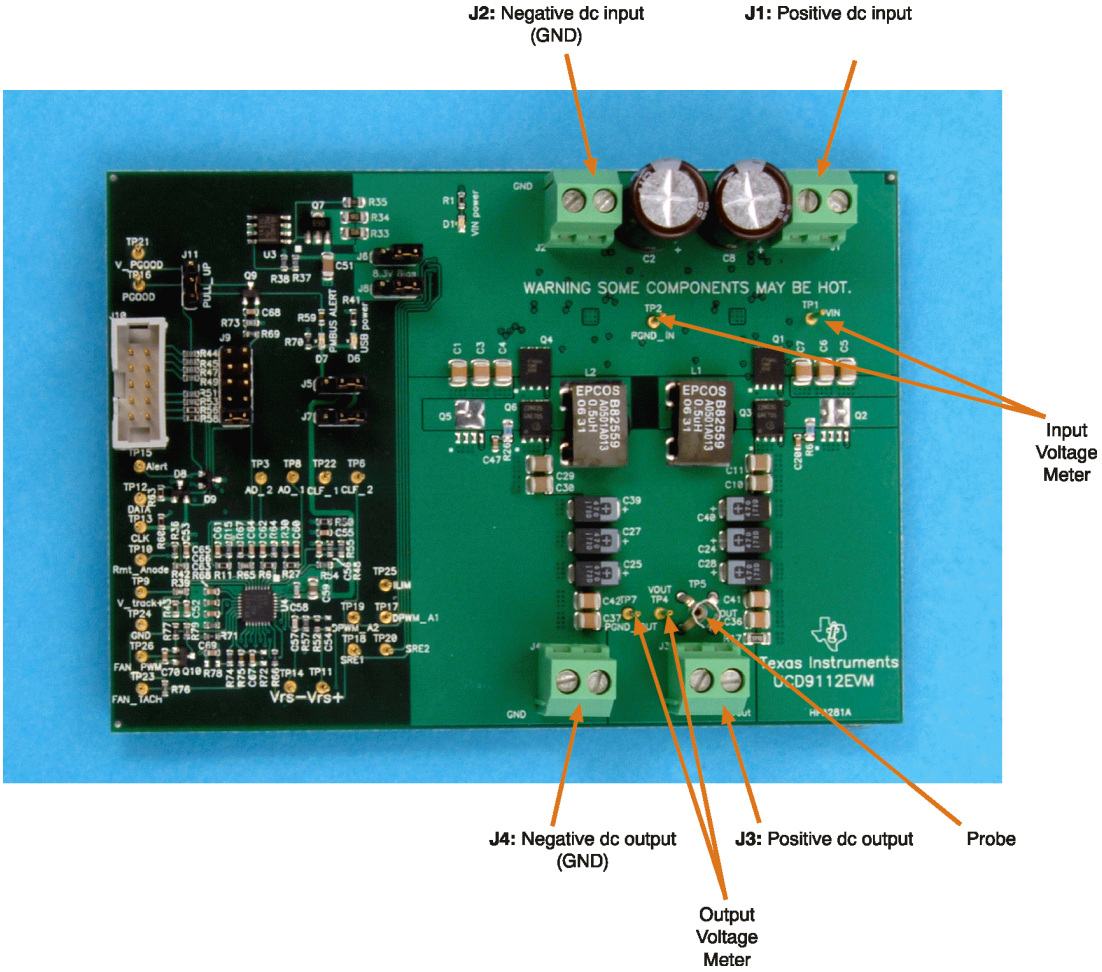

Figure 1. DC Input Power and Output Power Connection

6.3.2 Output Load Connections

Set the output load connections in the following manner:

1. Set the load to constant current mode, with a load current of 0 A.
2. Connect J3 to the positive terminal of the load using AWG #14 wire.
3. Connect J4 to the negative terminal of the load using AWG #14 wire. This connection is shown in Figure 1.

6.3.3 Meters and Probe Connection

One voltage meter (V1) should be connected to TP1 and TP2 to measure the input voltage. The second meter (V2) should be connected to TP4 and TP7 to measure the output voltage.

Use a probe to plug into TP5 to measure the output voltage ripple through the oscilloscope. These connections are shown in Figure 1.

6.3.4 USB Adapter Connection

The USB adapter is connected in the following manner:

1. Connect one end of the ribbon cable to J10; connect the other end to the USB interface adapter.
2. Connect the mini-connector on the USB cable to the USB interface adapter, and connect the *A* connector to the USB port of the host. This connection is shown in Figure 2.

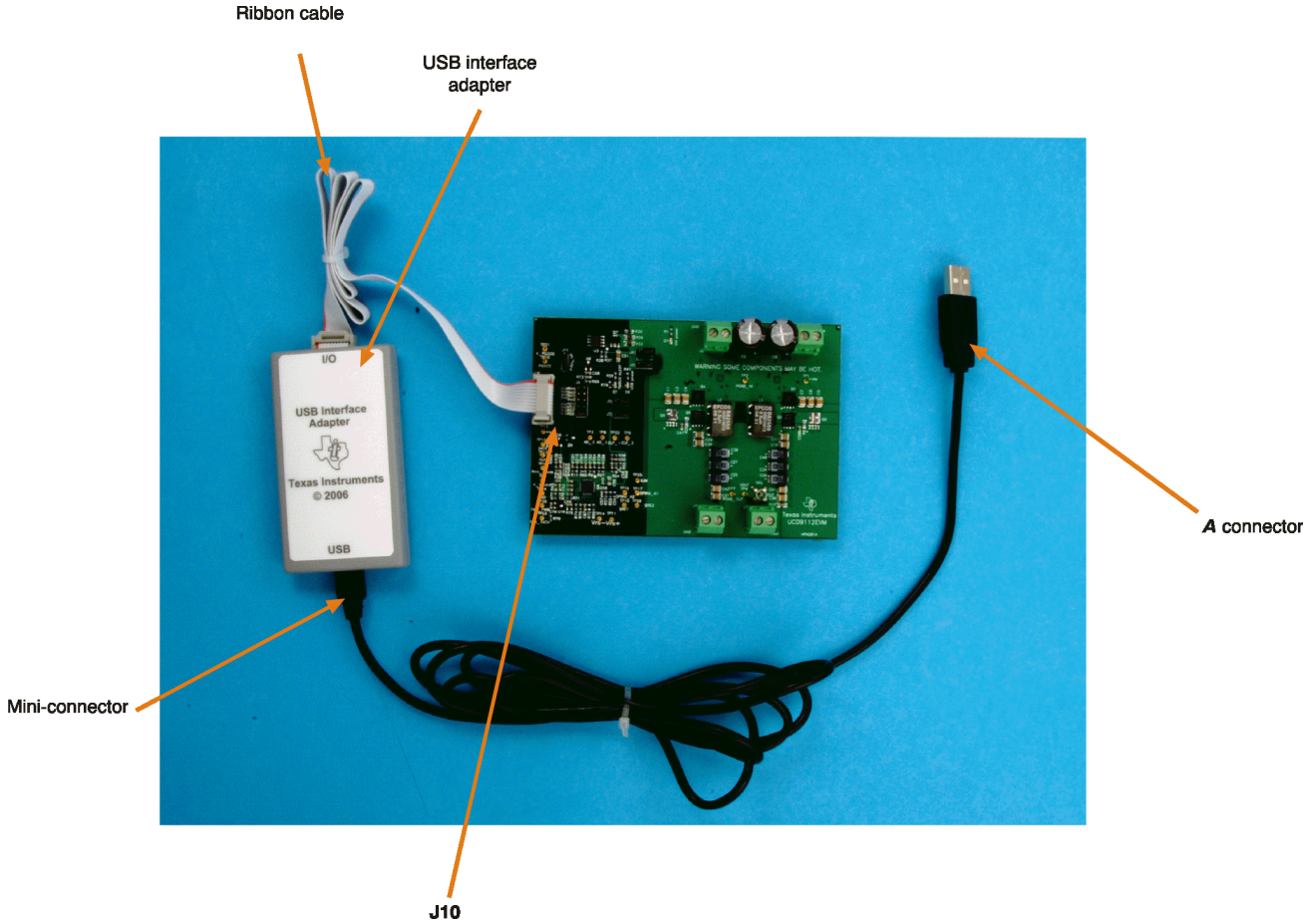

Figure 2. Connection Between EVM and Host

7 Test and Evaluation Procedures

7.1 EVM Startup

1. Follow the procedures discussed in the *Equipment Connection* section to make proper connections before starting up the EVM.
2. Turn on the input dc power supply, and set the input voltage to 12 V. Two green LEDs should be lit to indicate that the EVM is working.
3. Double-click the GUI icon on the host. The GUI interface screen appears, as shown in Figure 3.
4. Refer to the Texas Instruments application report, *PMBus Support in UCD911X Family of Digital Power Controllers* (SLUA427) for more details. This application note is available on the CD shipped with the kit or it can be downloaded from the TI web site.

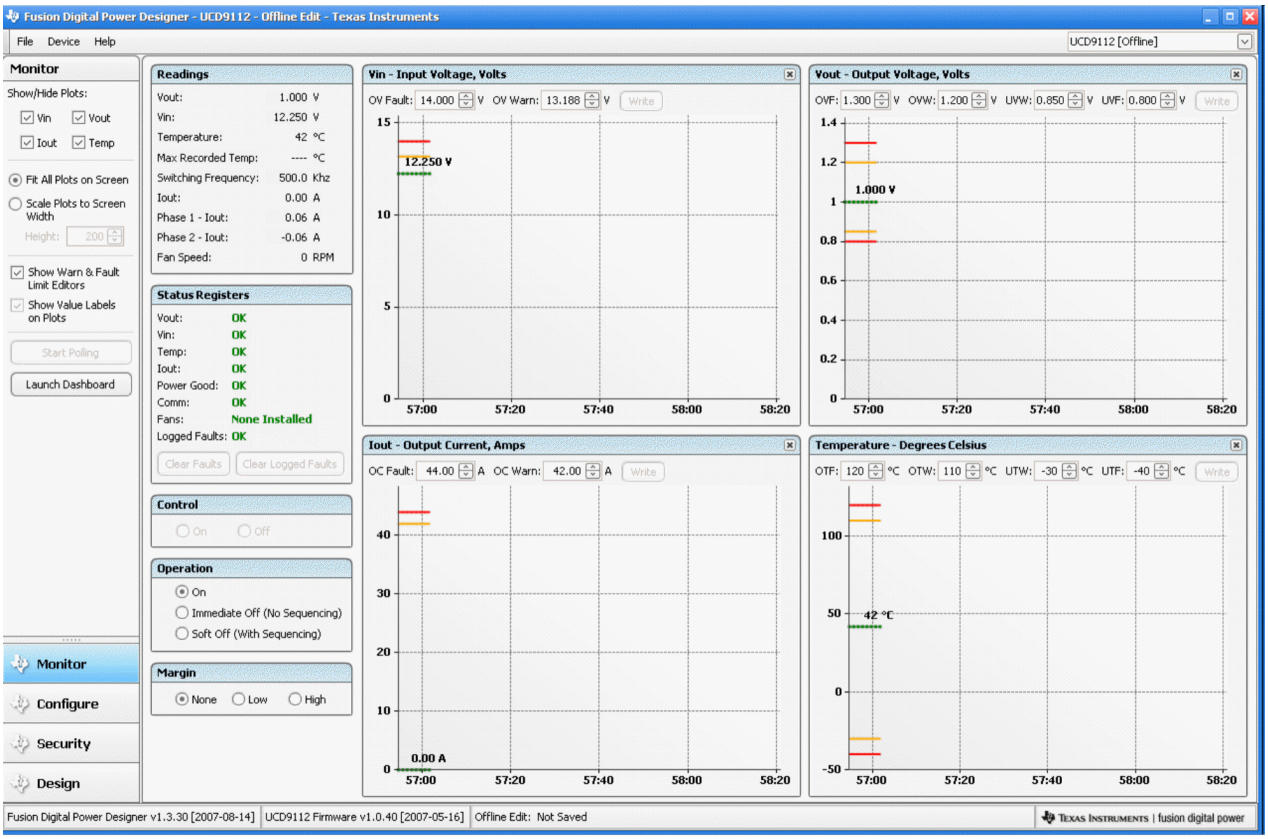

Figure 3. Graphical User Interface (GUI) Display

7.2 EVM Evaluation Procedure

7.2.1 Load Regulation

Turn on the output voltage (by default, set to 1 V) by clicking **ON** under the *Control* section as shown in Figure 3. Use the meter V2 to measure the output voltage as described in Section 6.3.3. Change the load current from 0 A to 40 A. If you record the voltage readings from V2, you can then calculate the load regulation.

7.2.2 Line Regulation

Set the load current to a fixed value. Increase the input voltage from 5 V to 14 V, and record the output voltage readings from meter V2. Calculate the line regulation from this data.

7.2.3 Output Voltage Ripple

Use the scope jack marked as TP5 to measure the output ripple. TP5 has a very short ground loop to minimize noise coupling. The tip of the probe must be connected to the positive output voltage present at the ferrule on the board, and the metal ground barrel connected to the ground present at the metal ring above the board. The scope should be triggered with ac coupling at 20-MHz bandwidth. If the probe does not fit into TP5, make the ground loop as small as possible; do not use the ground clip normally connected to the probe. Using the ground clip in this manner causes false readings.

7.2.4 Transient Response

Use the same probe setup as specified in the previous section. Select the expected step load for transient test, and set a proper slew rate.

7.2.5 Efficiency Measurement

In order to evaluate efficiency, both input power and output power must be measured very accurately. Use the current shunt to measure the input current; read the voltage across the shunt in mV, and then translate this result into the current measurement. For example, if a 2 mV/A shunt is used, and the voltage reading from the meter is 20 mV, the input current is approximately 10 A. The output current can be measured from a current shunt, or the load current meter if it is set to constant current load and has Kelvin connectors. Efficiency is calculated with the following formula:

$$\text{Efficiency } \eta = \frac{I_{OUT} \times V_{OUT}}{V_{IN} \times I_{IN}} \quad (1)$$

7.2.6 Output Voltage Set Point

Output voltage can be changed using the GUI configuration program. The following procedure provides an example of using the GUI to change the output voltage from 1 V to 1.5 V.

Example 1. Changing the Output Voltage Using the GUI

Step 1.	Click *Configure* on the lower left portion of the screen (see Figure 3).
Step 2.	Click *Basic Configuration*, where some parameters can be changed. First, enter **1.6** in the *Over Voltage Warning* box; then enter 1.7 in the *Over Voltage Fault* box; finally, enter **1.5** in the *Vout* box.
Step 3.	Click *Write to Hardware* to confirm all these changes. If this configuration must be kept in nonvolatile memory, click *Store RAM to Flash*.

Note: If the last step is applied, then the new settings will be the new start-up default values.

For other configurations, refer to the *Fusion Digital Power Designer User Manual* for more information.

7.2.7 Fan Speed Test

The UCD9112 supports fan speed adjustment and monitoring. Example 2 outlines the steps needed to evaluate a PWM fan with four wires supplied by SanyoDenki [109P0412P3033] that can be used for this test. (Other equivalent fans can also be used). The fan speed is adjusted by the PWM duty cycle that is controlled by the FAN_PWM pin (TP26) of the UCD9112. The fan speed is measured by counting the fan tach pulses with the fan tach output connected to the FAN_TACH pin (TP23) of the UCD9112 device.

Example 2. Fan Speed Monitoring Example

Step 1.	Connect the ground (black) to GND (TP24); connect the fan tach signal (yellow) to the FAN_TACH pin (TP23); connect the fan PWM input (brown) to the FAN_PWM pin (TP25). Finally, connect a 12-V power supply to the fan power (red).
Step 2.	Click on *Advanced Configuration* from the *Configure* page, where two relevant parameters must be changed. The first parameter is **FAN_CONFIG_1_2**; the default setting for this parameter is that the fan is not installed (with 0x10). This parameter must be changed to 0x90 to install the fan. The second command is **FAN_COMMAND_1**. This parameter is used to change the fan speed by changing the PWM duty cycle.
Step 3.	The fan speed reading (in RPM) is shown under the *Monitor* page. If the fan speed is less than the limit set by the command `FAN_SPEED_FAULT_LIMIT [MFR24]`, a fan fault is triggered and appears on the GUI.

7.2.8 Tracking Test

The UCD9112EVM provides the capability to evaluate the tracking function of the UCD9112. Follow this procedure to test the tracking function operation.

Step 1. Connect the positive output of a dc power supply to the V_track+ pin (TP9), and connect the negative output of the supply to the GND pin (TP24).

Step 2. Click on *Advanced Configuration* from the *Configure* page. Select ENABLE from **TRACKING_ENABLE [MFR 19]** box. The output voltage follows the voltage applied to the V_track+ pin (TP9). The voltage on this pin should be less than 4 V. Refer to the application note, *Fusion Digital Power Designer User Manual* for more information. This document is available through the **Help** menu in the GUI.

7.2.9 Control Loop Gain and Phase Margin Measurement

Follow the procedure presented in Example 3 to create Bode diagrams of the loop transfer function; it is recommended to use a network analyzer when doing so.

Example 3. Creating Bode Plots of the Loop Transfer Function

Step 1.	Connect the input signal amplitude measurement probe of the network analyzer (channel A) to TP4 or TP11.
Step 2.	Connect the output signal amplitude measurement probe of the network analyzer (channel B) to TP11 or TP4.
Step 3.	Connect the ground lead of channel A and channel B to signal ground (TP24).
Step 4.	Inject 25 mV across the resistor R46 via the isolation transformer.
Step 5.	Sweep the frequency from 500 Hz to 1 MHz with a 10 Hz or smaller post filter.

Gain and phase plots are then generated by the network analyzer. Measuring phase margin, gain margin, and the crossover frequency are now possible. To redesign the compensation loop, refer to the application note, *Designing the Digital Compensator for UCD91xx-based Digital Power Supply*, (SLUA416) for more details.

7.2.10 EVM Configuration

The EVM operating parameters are configurable through the GUI. One example is given in Section 7.2.6. Refer to the *Fusion Digital Power Designer User Manual* for more details.

7.2.11 EVM Shutdown

After the evaluation is finished, select **OFF** to turn off the output voltage through the *Control* command; shut down the input voltage, and disconnect the other equipment.

8 UCD9112EVM Typical Performance Characteristics

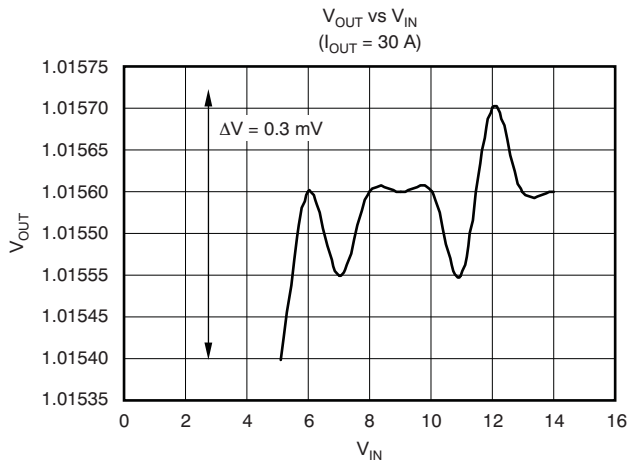

Figure 4. Line Regulation

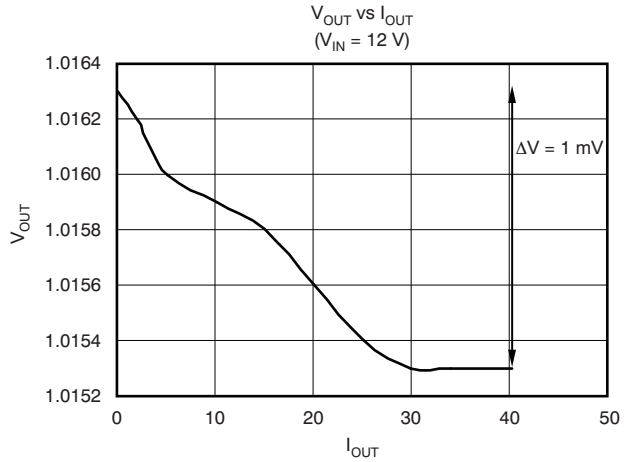

Figure 5. Load Regulation

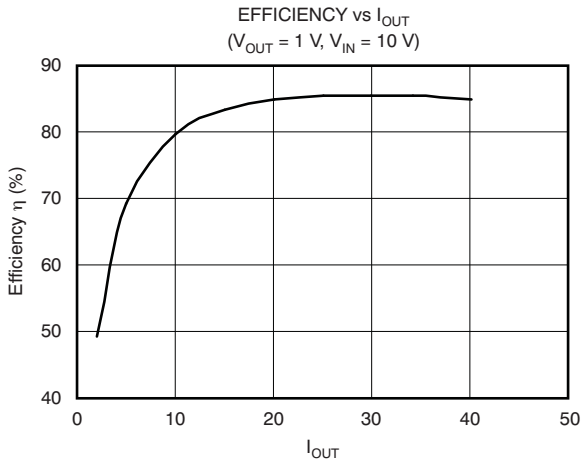

Figure 6. Efficiency η vs I_{OUT}

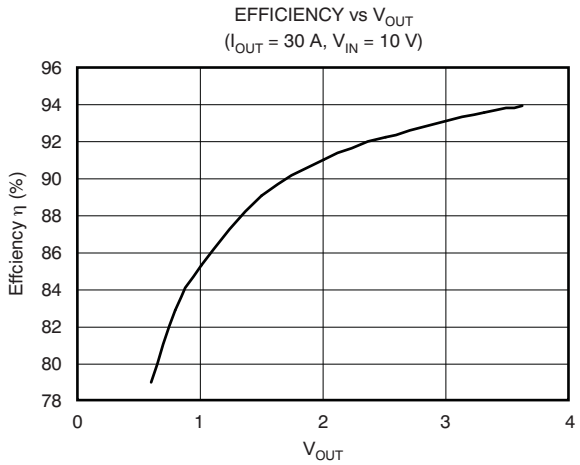

Figure 7. Efficiency η vs V_{OUT}

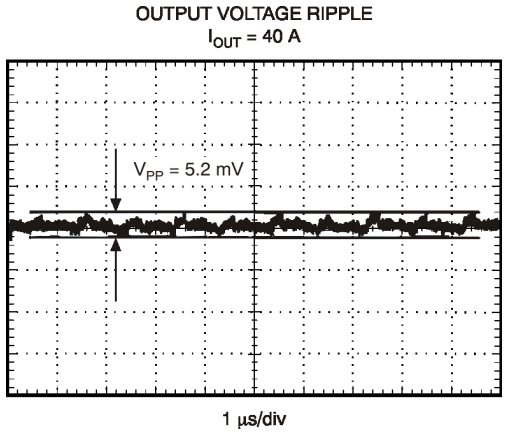

Figure 8. Output Voltage Ripple

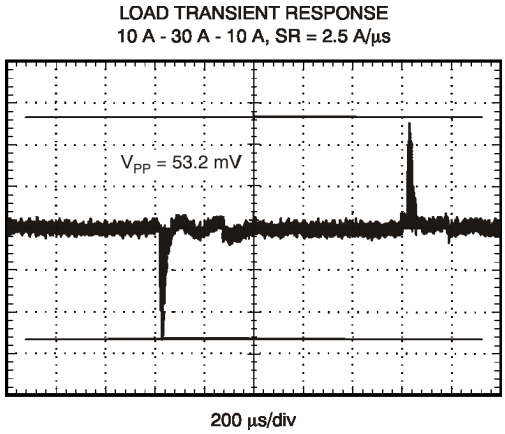

Figure 9. Load Transient Response

9 UCD9112EVM Schematics

Note: Board layouts are not to scale. These are intended to show how the board is laid out; they are not intended to be used for manufacturing UCD9112EVM PCBs.

Full-size schematics are appended to the end of this document.

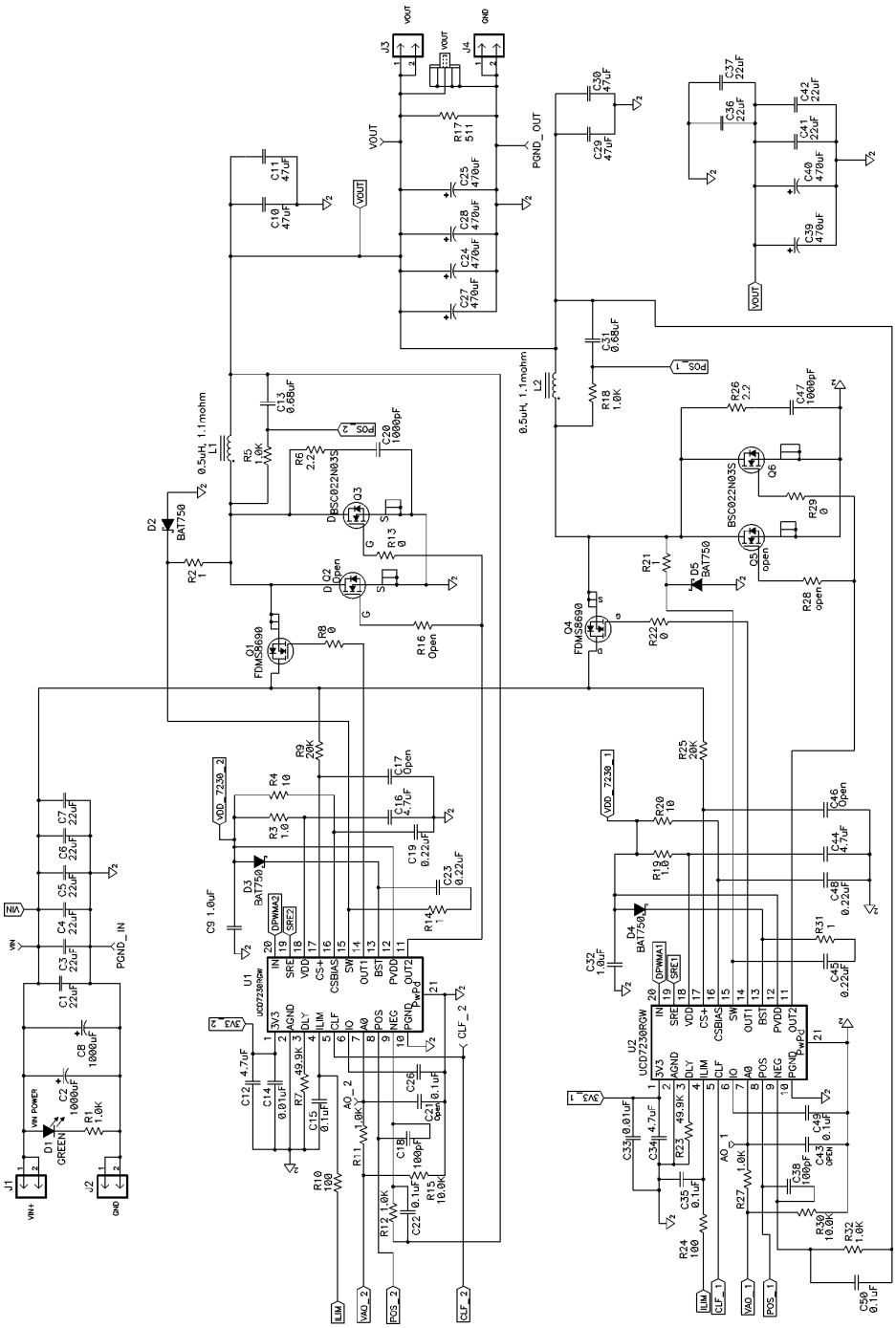

Figure 10. UCD9112EVM Schematic

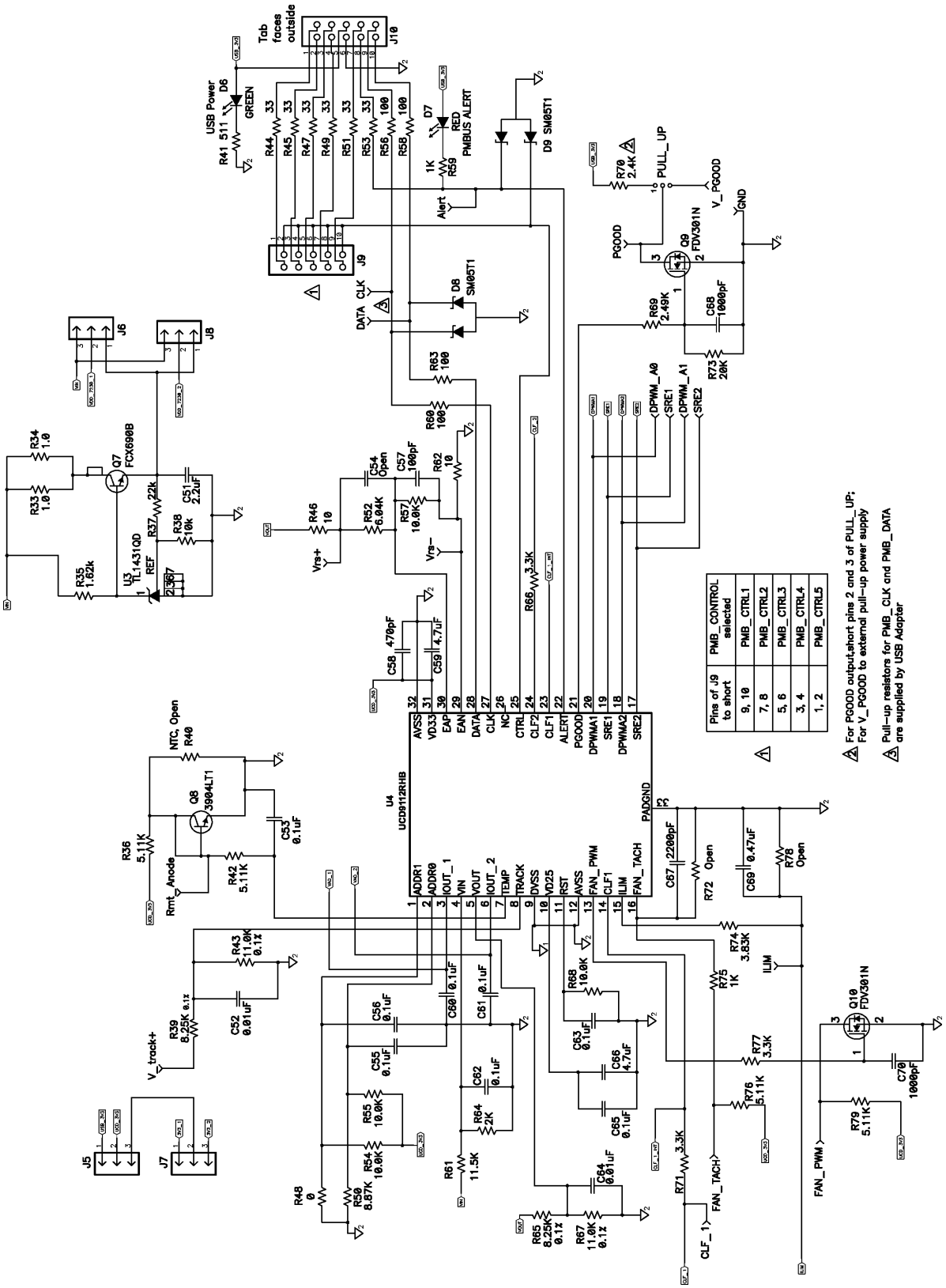

Figure 11. UCD9112EVM Schematic

10 UCD9112EVM Silkscreen and PCB Layout

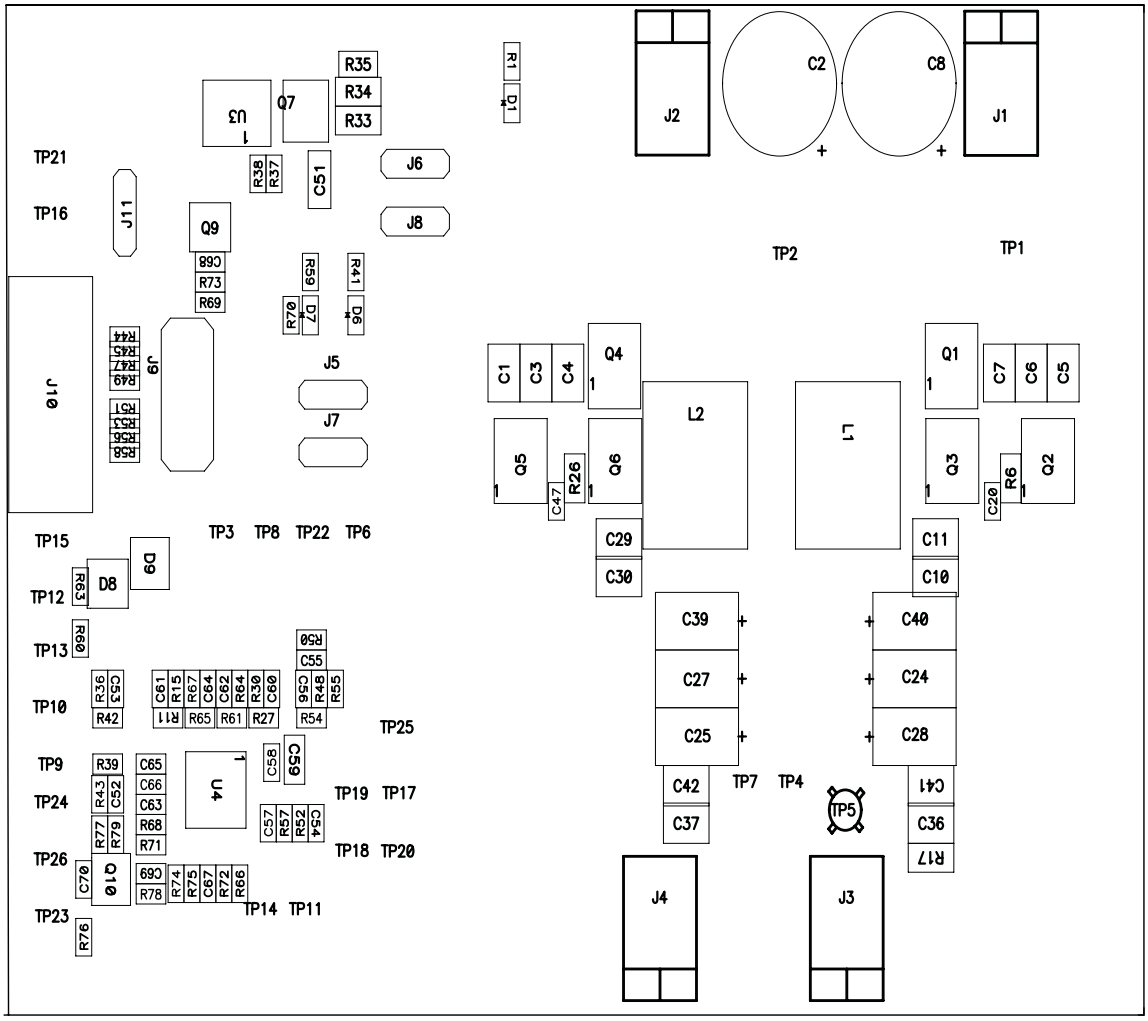

Figure 12. Top Layer Silkscreen

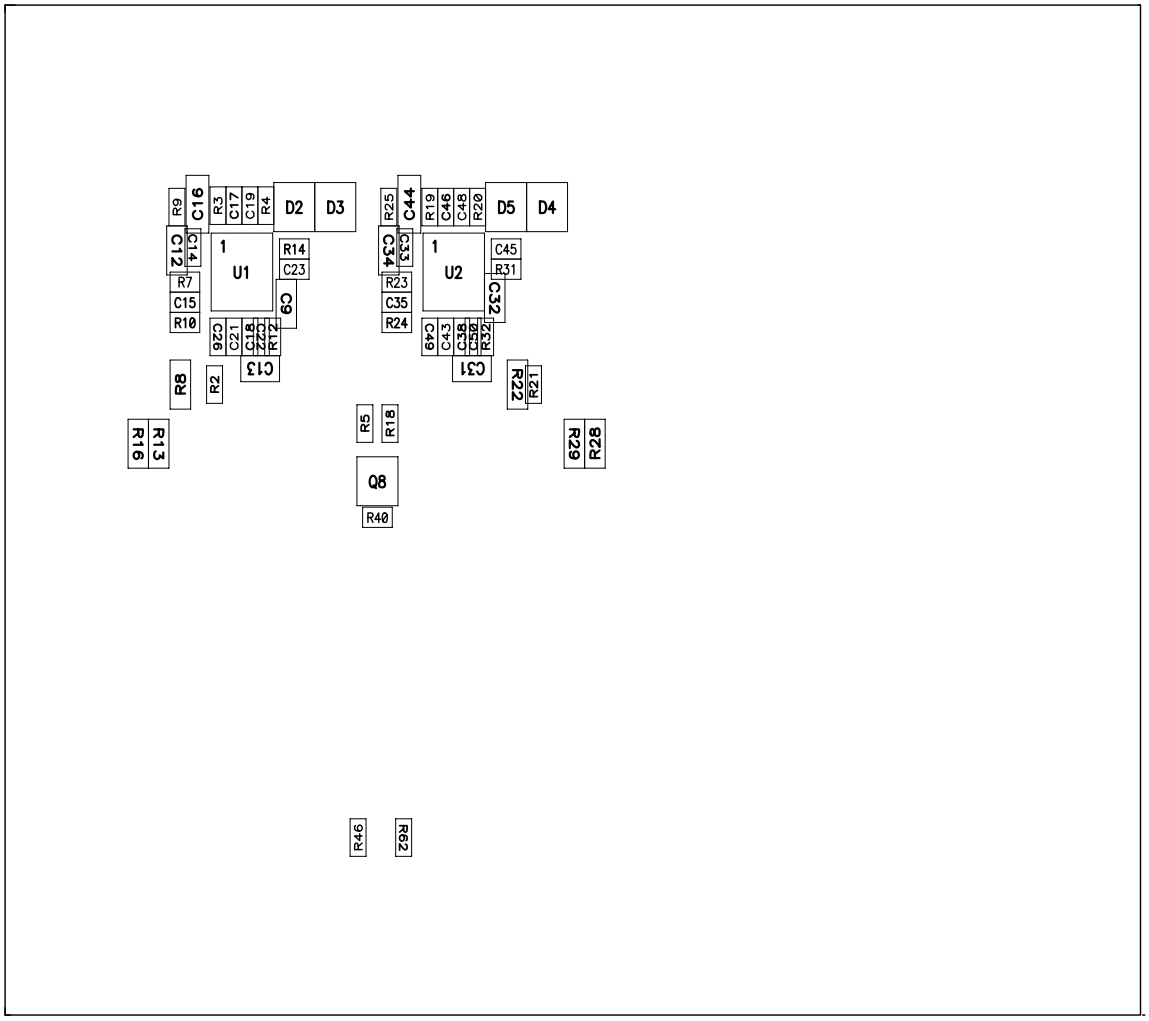

Figure 13. Bottom Layer Silkscreen

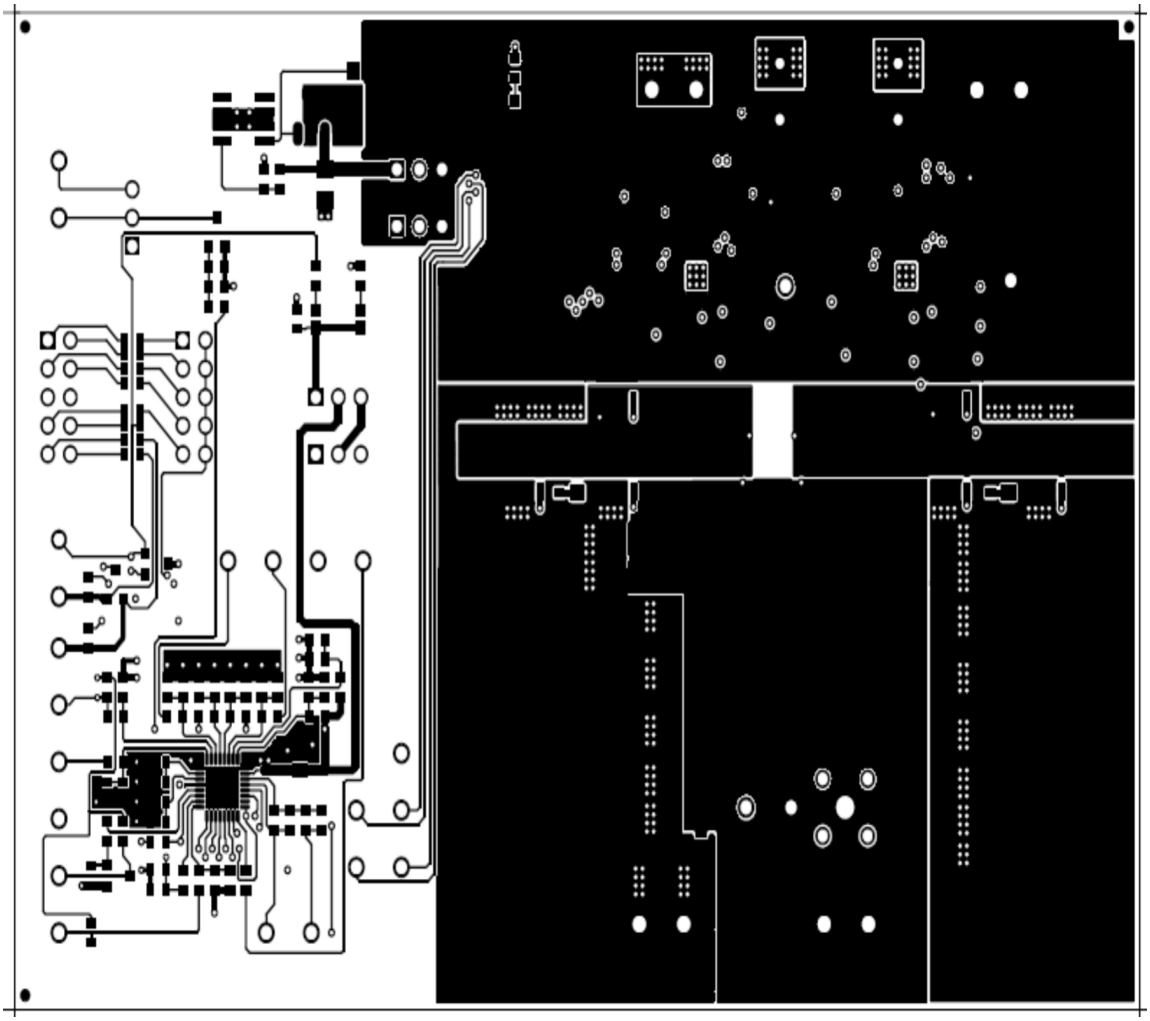

Figure 14. UCD9112EVM PCB Top Layer (Component Side)

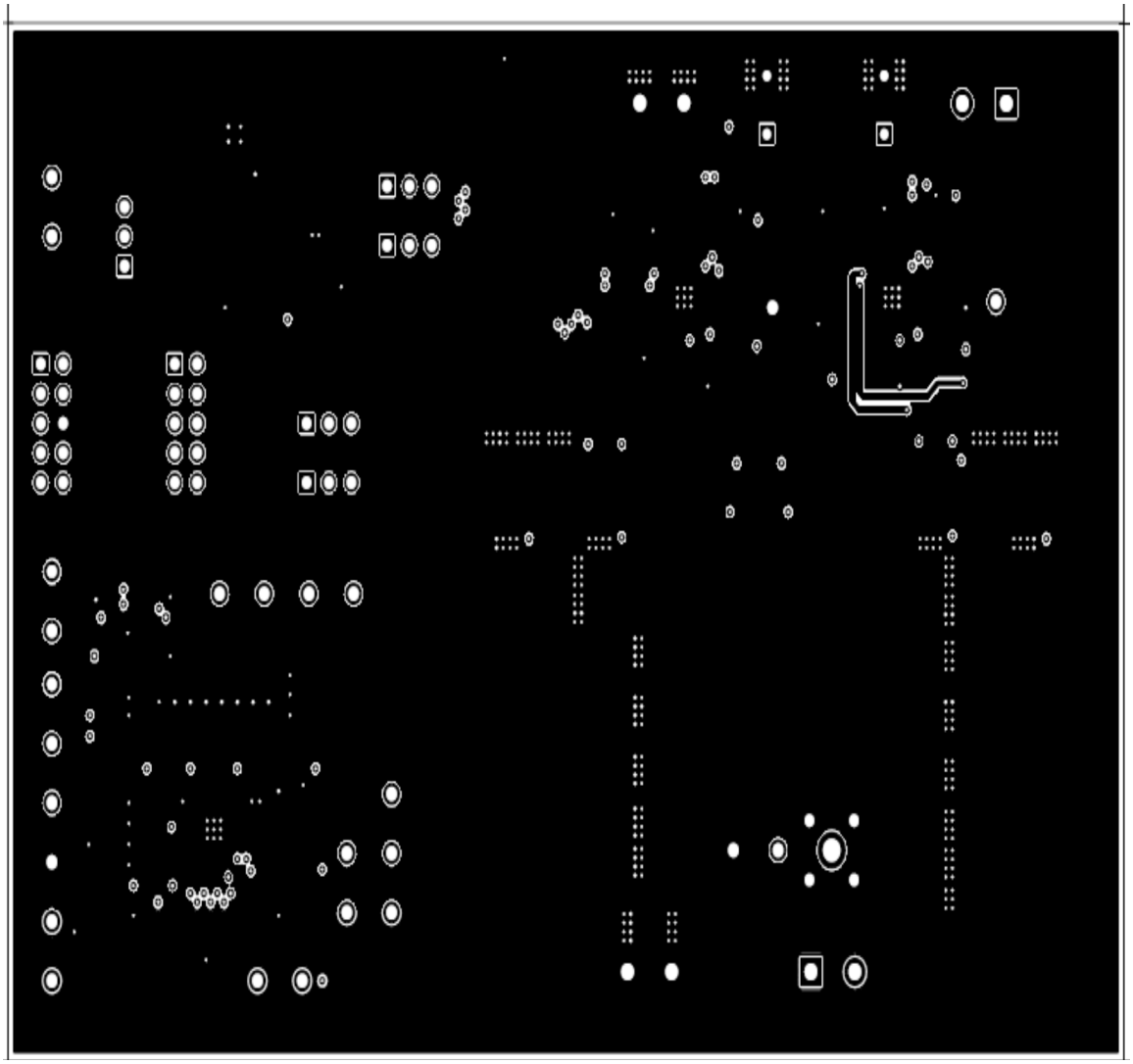

Figure 15. UCD9112EVM PCB Layer 1 (Internal)

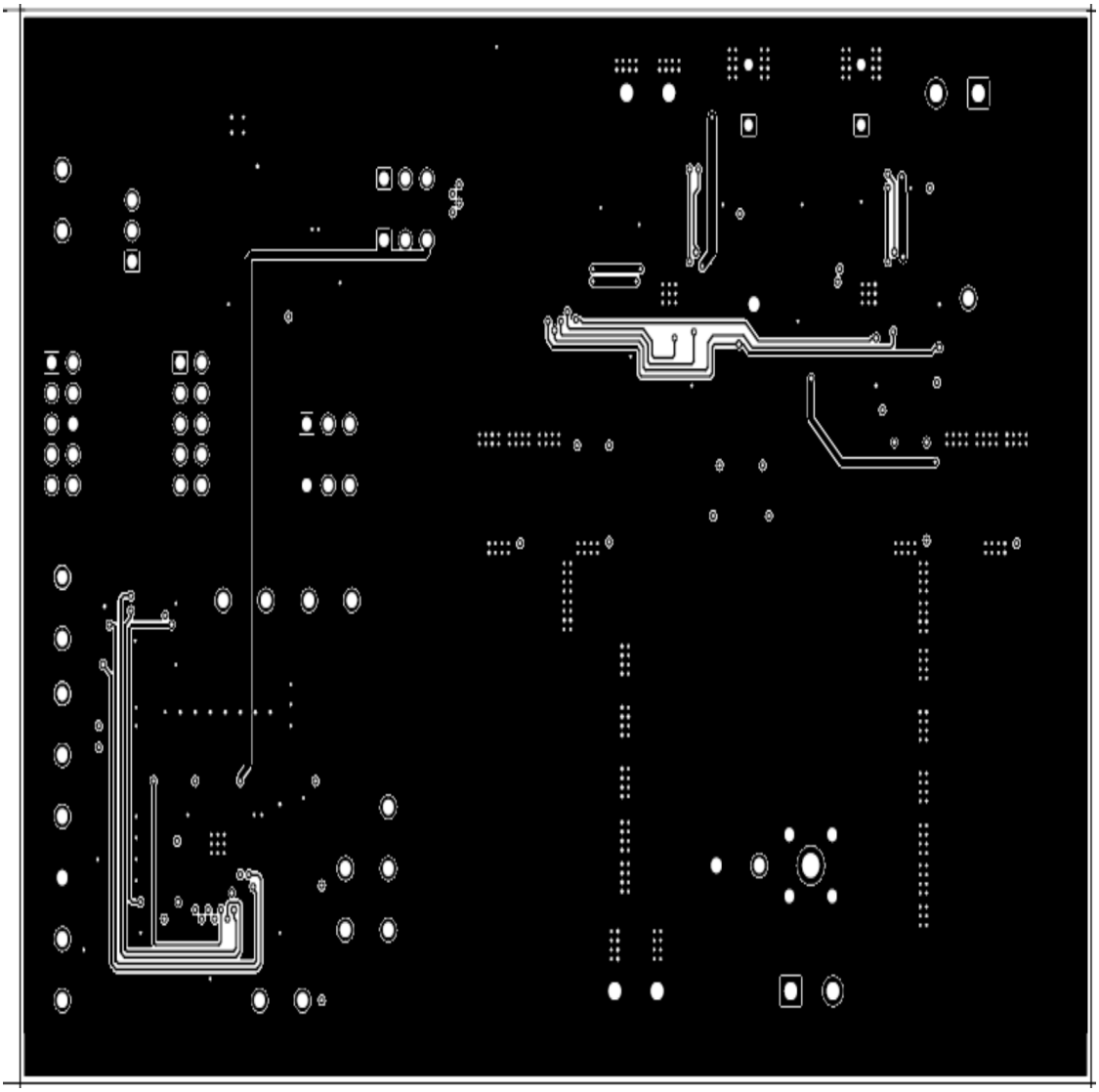

Figure 16. UCD9112EVM PCB Layer 2 (Internal)

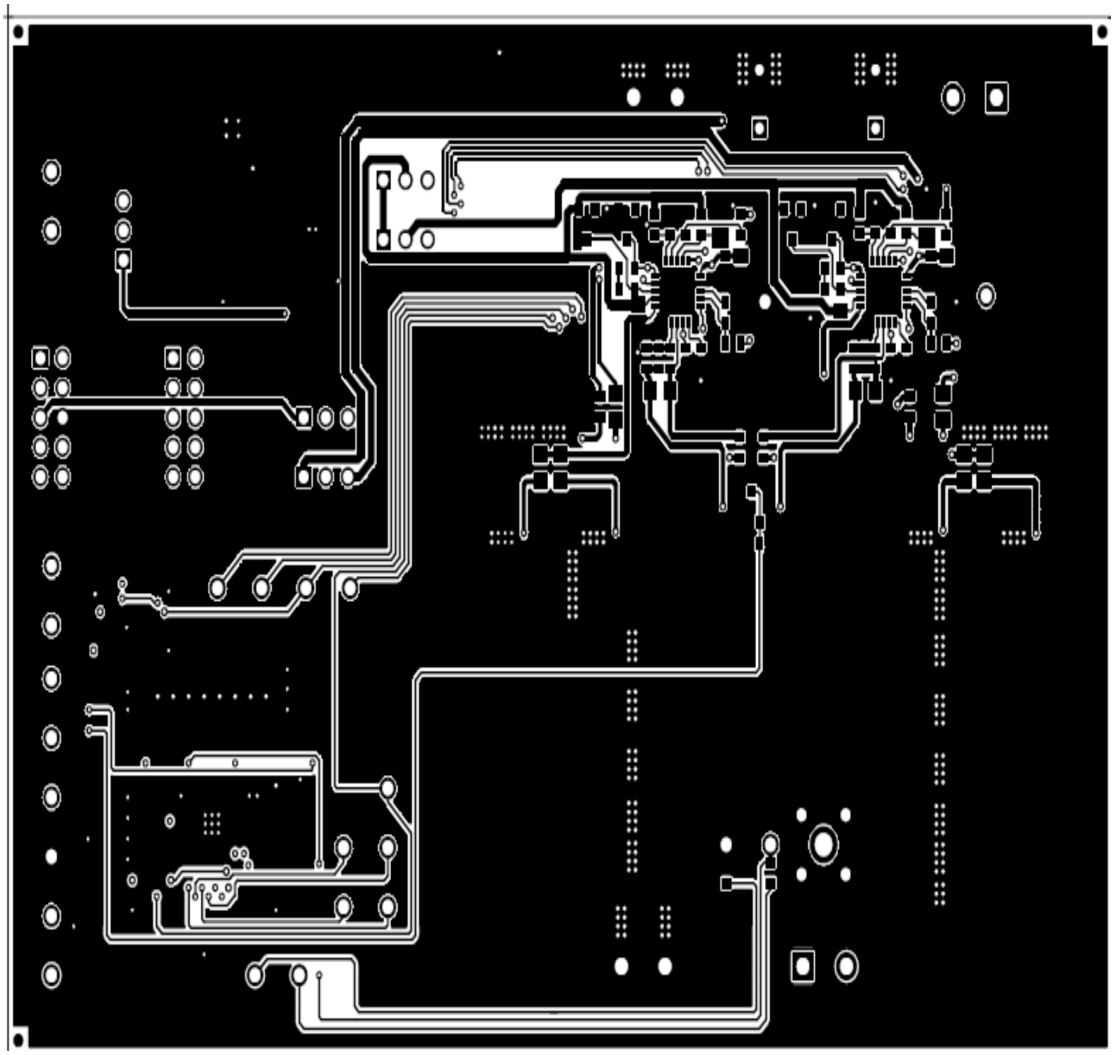

Figure 17. UCD9112EVM PCB Bottom Layer (Solder Side)

11 UCD9112EVM Bill of Materials

Table 4. UCD9112EVM Bill of Materials

RefDes	Description	Value	Size	Part Number	MFR
C1, C3–C7, C36, C37, C41, C42	Capacitor, Ceramic, 25-V, X7R, 10%	22 µF	1210	GRM32ER71E226KE15L	Murata
C10, C11, C29, C30	Capacitor, Ceramic, 6.3-V, X7R, 10%	47 µF	1210	GRM32ER71E476KE15L	Murata
C12, C34, C59	Capacitor, Ceramic, 4.7 µF, 16V, X7R, 20%	4.7 µF	0805	0805YC475MAT2A	AVX
C13, C31	Capacitor, Ceramic, 0.68 µF, 25V, X7R, 5%	0.68 µF	0805	08053C684JAT2A	AVX
C14, C33, C52	Capacitor, Ceramic, 0.01-µF, 16-V, X7R, ±10%	0.01 µF	0603	GRM188R71C103KA01D	Murata
C15, C26, C35, C49, C53, C55, C56, C63	Capacitor, Ceramic, 0.1-µF, 16-V, X7R, ±10%	0.1 µF	0603	GRM188R71C104KA01D	Murata
C16, C44	Capacitor, Ceramic, 4.7-µF, 25-V, X7R, ±10%	4.7 µF	1206	GRM31CR71E475KA88L	Murata
C17, C46	Capacitor, Ceramic, 100-pF, 50V, NPO	Open	0603	C1608C0G1H101J	TDK
C18, C38, C57	Capacitor, Ceramic, 100-pF, 50V, NPO	100 pF	0603	C1608C0G1H101J	TDK
C19, C23, C45, C48	Capacitor, Ceramic, 0.22-µF, 25-V, X7R, ±10%	0.22 µF	0603	GRM188R71E224KA88D	Murata
C2, C8	Capacitor, Electrolytic, 25V, Temp -55°C to 105°C ±20%	1000 µF	12.5 × 20 mm	UPW1E102MHD	Rubycon/Nichicon
C20, C47	Capacitor, Ceramic, 1000pF, 50V, X7R, 10%	1000 pF	0603	GRM188R71H102KA01D	Murata
C21	Capacitor, Ceramic, 100 pF, 16-V, X7R, ±10%, Open	Open	0603	GRM188R71C104KA01D	Murata
C22, C50	Capacitor, Ceramic, 0.1 µF 50V, NPO	0.1 µF	0603	C1608C0G1H104J	TDK
C24, C25, C27, C28, C39, C40	Capacitor, POS-Cap, 470 µF, 6.3V, 0.010Ω, 20%, 7343	470 µF	7343	6TPD470M	Sanyo
C43	Capacitor, Ceramic, 100 pF, 16-V, X7R, ±10%, Open	OPEN	0603		Murata
C51	Capacitor, Ceramic,2.2-µF, 25-V, X7R, ±10%	2.2 µF	1206	GRM31CR71E225KA88L	Murata
C54	Capacitor, Ceramic, Open, 50V, NPO	Open	0603		TDK
C58	Capacitor, Ceramic, 470 pF, 50V, NPO	470 pF	0603	C1608C0G1H471J	TDK
C60–C62, C65	Capacitor, Ceramic, 16V, X7R, 0.1 µF, 10%	0.1 µF	0603	GRM188R71C104KA01D	Murata
C64	Capacitor, Ceramic, 16V, X7R, 0.01µF, 10%	0.01 µF	0603	GRM188R71C103KA01D	Murata
C66	Capacitor, Ceramic, 4.7-µF, 6.3-V, X5R, ±10%	4.7 µF	0603	GRM188R70J475KA01D	Murata
C67	Capacitor, Ceramic, 2200pF, 16-V, X7R, ±10%	2200 pF	0603	GRM188R71C222KA01D	Murata
C68, C70	Capacitor, Ceramic, 1000pF, 16-V, X7R, ±10%	1000 pF	0603	GRM188R71C102KA01D	Murata
C69	Capacitor, Ceramic, 0.47-µF, 16-V, X7R, ±10%	0.47 µF	0603	GRM188R71C474KA01D	Murata
C9, C32	Capacitor, Ceramic, 1.0µF, 25V, X7R, 20%	1.0 µF, 25V	0805	08053C105MAT2A	AVX
D1, D6	Diode, LED, Green, 2.1-V, 20-mA, 6-mcd	GREEN	0603	LTST-C190GKT	Liteon
D2–D5	Diode, Schottky, 750-mA, 40-V	BAT750	SOT23	BAT750	Vishay-Liteon
D7	Diode, LED, Red, 1.8-V, 20-mA, 20-mcd	RED	0603	LTST-C190CKT	Lite On
D8, D9	Dual Zener, ESD TVS, 6.5 V	SM05T1	SOT23	SM05T1	On-Semi
J1–J4	Header, Side Entry 2-pin, 5mm spacing	1711026	0.441 × 0.200 in	1711026	Phoenix Contact
J10	Connector, Male Straight 2×5 pin, 100mil spacing, 4 Wall	2510-6002UB	0.338 × 0.788 in	2510-6002UB	3M
J11	Header, 3-pin, 100mil spacing, (36-pin strip)	PULL_UP	0.100 × 3	PTC36SAAN	Sullins
J5–J8	Header, 3-pin, 100mil spacing, (36-pin strip)	PTC36SAAN	0.100 in × 3	PTC36SAAN	Sullins
J9	Header, 2x5-pin, 100mil spacing (36-pin strip)	PTC36DAAN	0.100 in × 5 × 2	PTC36DAAN	Sullins
Jumper	Shunt, 100-mil		0.1	929957-08-ND	
L1, L2	Inductor, Power SMT, 0.5 µH, 30A, 1.1 mΩ	0.5 µH, 1.1 mΩ	0.433 x 0.516 in	B82559A0501A013	Epcos
Q1, Q4	MOSFET, NChan, 30V, 27A, 9 mΩ	FDMS8690	POWER 56	FDMS8690	Fairchild
Q2	MOSFET, Nch, 30V, 50A, 2.2 mΩ	Open	TDSON-8	BSC022N03S	Infineon
Q3, Q6	MOSFET, Nch, 30V, 50A, 2.2 mΩ	BSC022N03S	TDSON-8	BSC022N03S	Infineon
Q5	MOSFET, Nch, 30V, 50A, 2.2 mΩ	open	TDSON-8	BSC022N03S	Infineon
Q7	Transistor, NPN High Curent, VCE 30V, VCB 80V, VEB6V, IC 7A	FCX690B	SOT89	FCX690B	Zetex

Table 4. UCD9112EVM Bill of Materials (continued)

RefDes	Description	Value	Size	Part Number	MFR
Q8	Bipolar, NPN, xx-V, yy-mA, zz-W	3904LT1	SOT23	MMBT3904LT1	On Semi
Q9, Q10	MOSFET, Nch, 25V, 220-mA, 5 Ω	FDV301N	SOT23	FDV301N	Fairchild
R1, R5, R11, R12, R18, R27, R32	Resistor, Chip, 1.0K, 1/16-W, 1%	1.0K	0603	Std	Std
R10, R24	Resistor, Chip, 100, 1/16-W, 1%	100	0603	Std	Std
R13	Resistor, Chip, 1/10W, 1%, 0 Ω	0805	0805	Std	Std
R15, R30, R54, R55, R57, R68	Resistor, Chip, 10 kΩ, 1/10-W, 1%	10.0K	0603	Std	Std
R16	Resistor, Chip, 1/10W, 1%, 1 Ω, 805	Open	0805	Std	Std
R17	Resistor, Chip, 511-Ω, 1/8W, 5% 511		1206	Std	Std
R2, R3, R14, R19, R21, R31	Resistor, Chip, 1.0-Ω, 1/16-W, 5%	1	0603	Std	Std
R23	Resistor, Chip, 49.9 kΩ, 1/10-W, ±1%	49.9K	0603	Std	Std
R25, R9	Resistor, Chip, 20 kΩ, 1/16-W, 1%	20K	0603	Std	Std
R28	Resistor, Chip, 1/10W, 1%, 0 ohm, 805	open	0805	Std	Std
R29	Resistor, Chip, 1/10W, 1%, 0 ohm,	0805	0805	Std	Std
R33, R34	Resistor, Chip, 1-Ω, 1/4W, 5%	1	1206	Std	Std
R35	Resistor, Chip, 1/10W, 1.62K, 5%	1.62k	0805	Std	Std
R36, R42	Resistor, Chip, 5.11 kΩ, 1/10-W, ±1%	5.11K	0603	Std	Std
R37	Resistor, Chip, 22 kΩ, 1/10-W, 1%	22k	0603	Std	Std
R38	Resistor, Chip, 10 kΩ, 1/10-W, 1%	10k	0603	Std	Std
R39, R65	Resistor, Chip, 8.25 kΩ, 1/16-W, ±0.1%	8.25K	0603	Std	Std
R4, R20	Resistor, Chip, 10-Ω, 1/10-W, ±1%	10	0603	Std	Std
R40	Resistor, Chip, 10.7 kΩ, 1/10-W, ±1% NTC	Open	0603	Std	Std
R41	Resistor, Chip, 511, 1/16-W, 5%	511	0603	Std	Std
R43, R67	Resistor, Chip, 11.0 kΩ, 1/16-W, ±0.1%	11.0K	0603	Std	Std
R44, R45, R47, R49, R51, R53	Resistor, Chip, 33-Ohms, 1/16-W, 5%	33	0603	Std	Std
R46, R62	Resistor, Chip, 10-Ω, 1/10-W, 1%	10	0603	Std	Std
R48	Resistor, Chip, 0-Ω, 1/16-W, 5%	0	0603	Std	Std
R50	Resistor, Chip, 8.87 kΩ, 1/16-W, 1%	8.87K	0603	Std	Std
R52	Resistor, Chip, 6.04 kΩ, 1/10-W, 1%	6.04K	0603	Std	Std
R56, R58, R60, R63	Resistor, Chip, 100-Ω, 1/16-W, 5%	100	0603	Std	Std
R59	Resistor, Chip, 1K, 1/16-W, 5%	1K	0603	Std	Std
R6, R26	Resistor, Chip, 1/10W, 1%, 2.2Ω, 805	2.2	0805	Std	Std
R61	Resistor, Chip, 11.5 kΩ, 1/10-W, ±1%	11.5K	0603	Std	Std
R64	Resistor, Chip, 2 kΩ, 1/10-W, ±1%	2K	0603	Std	Std
R66, R71, R77	Resistor, Chip, 3.3 kΩ, 1/10-W, 5%	3.3K	0603	Std	Std
R69	Resistor, Chip, 2.49 kΩ, 1/10-W, 1%	2.49K	0603	Std	Std
R7	Resistor, Chip,49.9 kΩ, 1/10-W, ±1%	49.9K	0603	Std	Std
R70	Resistor, Chip, 2.4 kΩ, 1/10-W, ±5%	2.4K	0603	Std	Std
R72	Resistor, Chip, 5.11 kΩ, 1/10-W, ±1%	Open	0603	Std	Std
R73	Resistor, Chip, 20 kΩ, 1/10-W, 1%	20K	0603	Std	Std
R74	Resistor, Chip, 3.83 kΩ, 1/10W, ±1%	3.83K	0603	Std	Std
R75	Resistor, Chip, 1 kΩ, 1/10-W, 5%	1K	0603	Std	Std
R76, R79	Resistor, Chip 5.11 kΩ, 1/10-W, 5%	5.11K	0603	Std	Std
R78	Resistor, Chip, 4.99 kΩ, 1/10W, ±1%	Open	0603	Std	Std
R8, R22	Resistor, Chip, 1/10W, 1%, 0 Ω,	0805	0805	Std	Std
TP1–TP26	Pin, Thru Hole, Tin Plate, for 0.062 PCB's		0.039 inch	K24A/M	Vector
TP5	Adaptor, 3.5-mm probe clip (or 131-5031-00)	VOUT	0.2	131-4244-00	Tektronix
U1, U2	IC, Power Stage (Analog Stuff)	UCD7230RGW	QFN-20	UCD7230RGW	TI

Table 4. UCD9112EVM Bill of Materials (continued)

RefDes	Description	Value	Size	Part Number	MFR
U3	IC, Precision Programmable Reference	TL1431QD	S08	TL1431QD or TL1431CD	TI
U4	IC, Digital Dual Phase Sync. Buck Controller	UCD9112RHB	QFN-32	UCD9112RHB	TI
	PCB			HPA281	Any
	Bumpers	2563	0.25×0.50	2563	SPC

12 References

The following documents are available for download through the Texas Instruments web site (www.ti.com).

1. *Designing the Digital Compensator for UCD91xx Based Digital Power Supply* (SLUA416)
2. *PMBus Support in UCD911x Family of Digital Power Controllers* (SLUA427)
3. *Configuration Security for UCD91xx Digital Controllers* (SLUA428)
4. *Fusion Digital Power Designer User Manual* (available with the TI-Fusion-Digital-Power-Designer Software program, SLVC118)

REVISION HISTORY		
REV	ENGINEERING CHANGE NUMBER	APPROVED

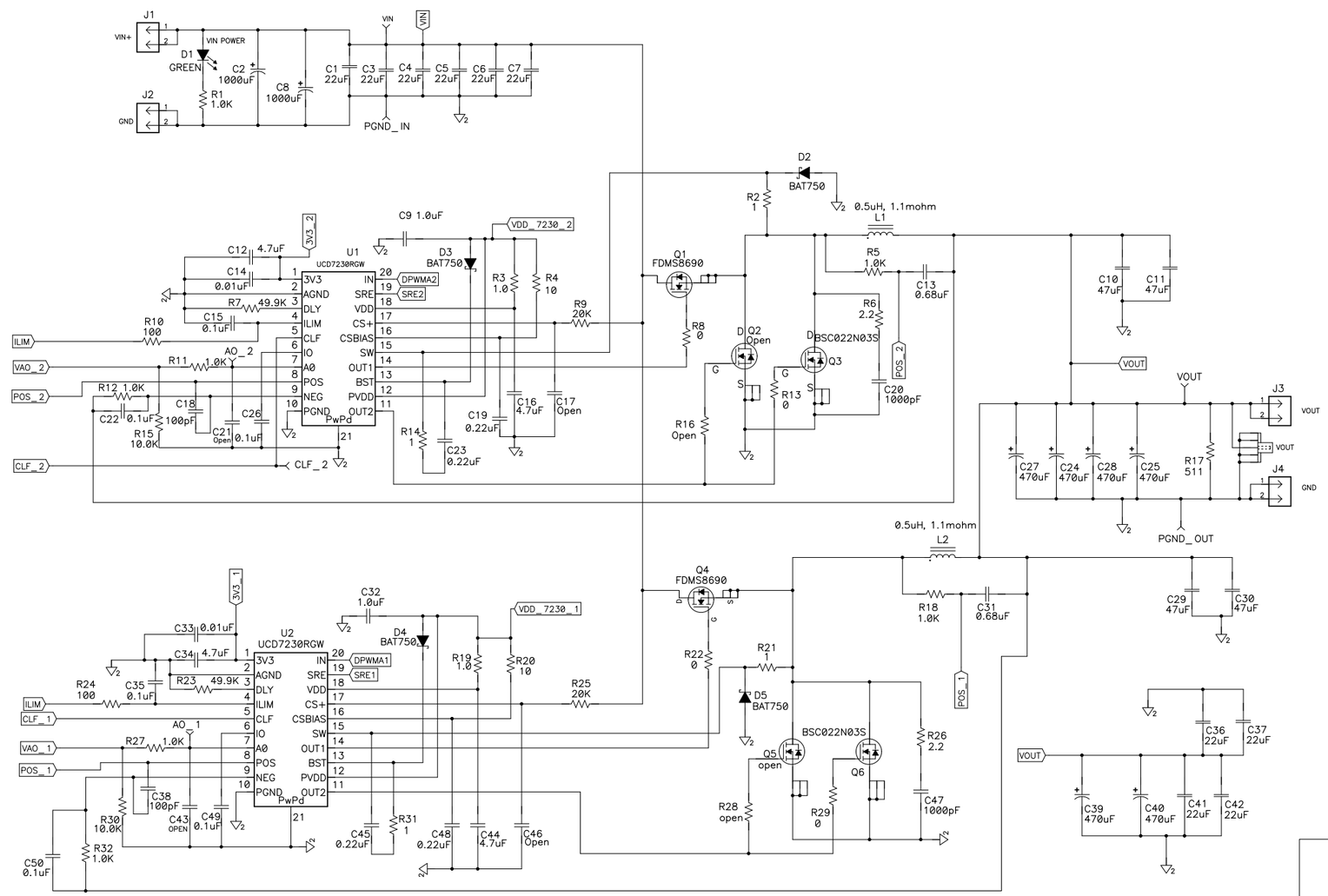

TEXAS INSTRUMENTS

POWER MANAGEMENT PRODUCTS
HIGH-PERFORMANCE ANALOG DIVISION
SEMICONDUCTOR GROUP

DALLAS, TX USA

ENGINEER	TITLE **UCD9112 Evaluation Module**
DRAWN BY	
DOCUMENT CONTROL NO.	SIZE **B** DATE **2007** REV **A**
SHEET **1** OF **2**	FILE

REVISION HISTORY		
REV	ENGINEERING CHANGE NUMBER	APPROVED

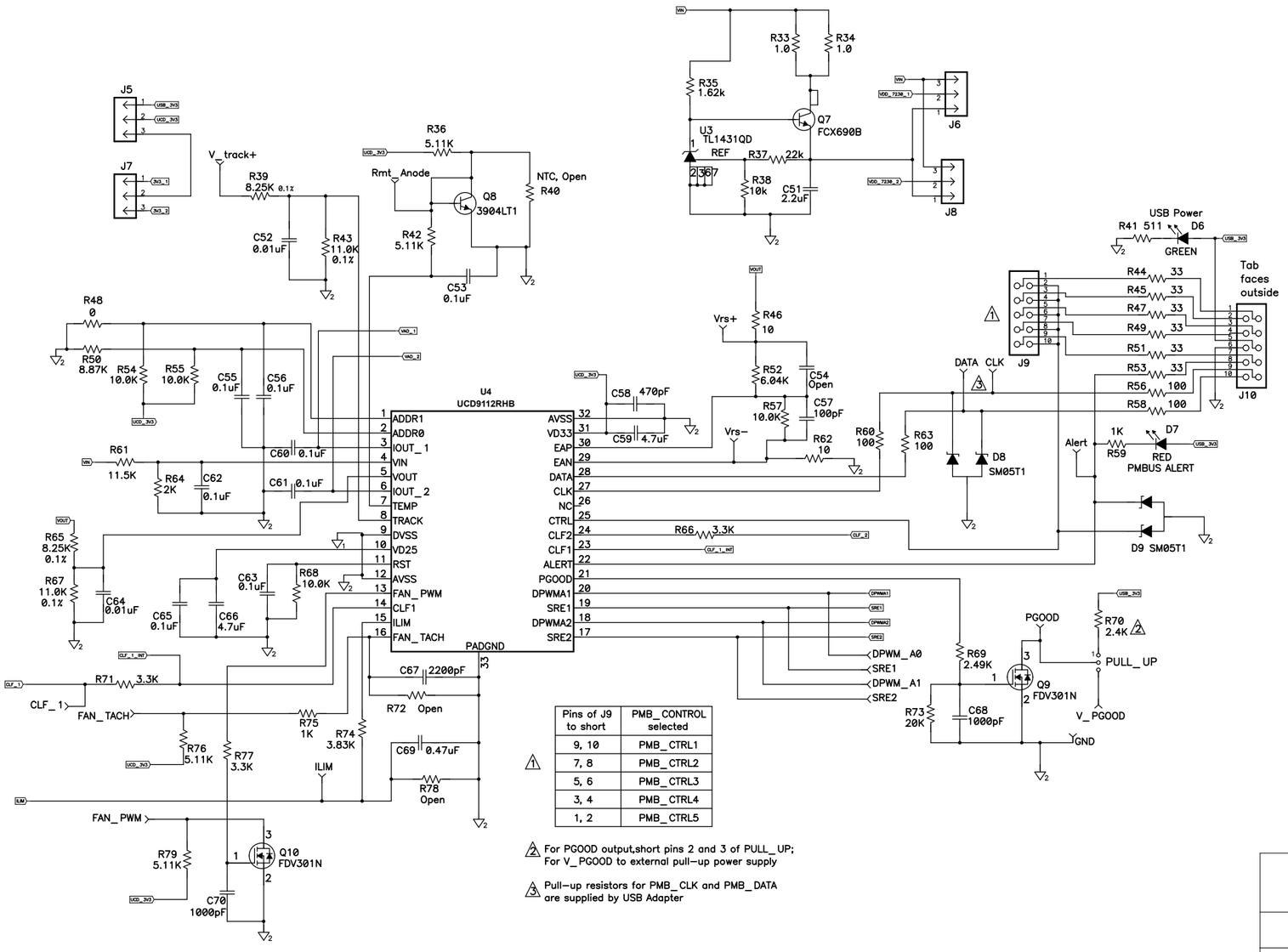

Pins of J9 to short	PMB_CONTROL selected
9, 10	PMB_CTRL1
7, 8	PMB_CTRL2
5, 6	PMB_CTRL3
3, 4	PMB_CTRL4
1, 2	PMB_CTRL5

1

2 For PGOOD output,short pins 2 and 3 of PULL_UP; For V_PGOOD to external pull-up power supply

3 Pull-up resistors for PMB_CLK and PMB_DATA are supplied by USB Adapter

TEXAS INSTRUMENTS

POWER MANAGEMENT PRODUCTS
HIGH-PERFORMANCE ANALOG DIVISION
SEMICONDUCTOR GROUP

DALLAS, TX USA

ENGINEER	TITLE UCD9112 Evaluation Module
DRAWN BY	
DOCUMENT CONTROL NO.	SIZE B DATE 2007 REV A
SHEET 2 OF 2	FILE

EVALUATION BOARD/KIT IMPORTANT NOTICE

Texas Instruments (TI) provides the enclosed product(s) under the following conditions:

This evaluation board/kit is intended for use for **ENGINEERING DEVELOPMENT, DEMONSTRATION, OR EVALUATION PURPOSES ONLY** and is not considered by TI to be a finished end-product fit for general consumer use. Persons handling the product(s) must have electronics training and observe good engineering practice standards. As such, the goods being provided are not intended to be complete in terms of required design-, marketing-, and/or manufacturing-related protective considerations, including product safety and environmental measures typically found in end products that incorporate such semiconductor components or circuit boards. This evaluation board/kit does not fall within the scope of the European Union directives regarding electromagnetic compatibility, restricted substances (RoHS), recycling (WEEE), FCC, CE or UL, and therefore may not meet the technical requirements of these directives or other related directives.

Should this evaluation board/kit not meet the specifications indicated in the User's Guide, the board/kit may be returned within 30 days from the date of delivery for a full refund. THE FOREGOING WARRANTY IS THE EXCLUSIVE WARRANTY MADE BY SELLER TO BUYER AND IS IN LIEU OF ALL OTHER WARRANTIES, EXPRESSED, IMPLIED, OR STATUTORY, INCLUDING ANY WARRANTY OF MERCHANTABILITY OR FITNESS FOR ANY PARTICULAR PURPOSE.

The user assumes all responsibility and liability for proper and safe handling of the goods. Further, the user indemnifies TI from all claims arising from the handling or use of the goods. Due to the open construction of the product, it is the user's responsibility to take any and all appropriate precautions with regard to electrostatic discharge.

EXCEPT TO THE EXTENT OF THE INDEMNITY SET FORTH ABOVE, NEITHER PARTY SHALL BE LIABLE TO THE OTHER FOR ANY INDIRECT, SPECIAL, INCIDENTAL, OR CONSEQUENTIAL DAMAGES.

TI currently deals with a variety of customers for products, and therefore our arrangement with the user **is not exclusive.**

TI assumes **no liability for applications assistance, customer product design, software performance, or infringement of patents or services described herein.**

Please read the User's Guide and, specifically, the Warnings and Restrictions notice in the User's Guide prior to handling the product. This notice contains important safety information about temperatures and voltages. For additional information on TI's environmental and/or safety programs, please contact the TI application engineer or visit www.ti.com/esh.

No license is granted under any patent right or other intellectual property right of TI covering or relating to any machine, process, or combination in which such TI products or services might be or are used.

FCC Warning

This evaluation board/kit is intended for use for **ENGINEERING DEVELOPMENT, DEMONSTRATION, OR EVALUATION PURPOSES ONLY** and is not considered by TI to be a finished end-product fit for general consumer use. It generates, uses, and can radiate radio frequency energy and has not been tested for compliance with the limits of computing devices pursuant to part 15 of FCC rules, which are designed to provide reasonable protection against radio frequency interference. Operation of this equipment in other environments may cause interference with radio communications, in which case the user at his own expense will be required to take whatever measures may be required to correct this interference.

EVM WARNINGS AND RESTRICTIONS

It is important to operate this EVM within the input voltage range of 5 V to 14 V and the output voltage range of 0.4 V to 4 V.

Exceeding the specified input range may cause unexpected operation and/or irreversible damage to the EVM. If there are questions concerning the input range, please contact a TI field representative prior to connecting the input power.

Applying loads outside of the specified output range may result in unintended operation and/or possible permanent damage to the EVM. Please consult the EVM User's Guide prior to connecting any load to the EVM output. If there is uncertainty as to the load specification, please contact a TI field representative.

During normal operation, some circuit components may have case temperatures greater than +105°C. The EVM is designed to operate properly with certain components above +85°C as long as the input and output ranges are maintained. These components include but are not limited to linear regulators, switching transistors, pass transistors, and current sense resistors. These types of devices can be identified using the EVM schematic located in the EVM User's Guide. When placing measurement probes near these devices during operation, please be aware that these devices may be very warm to the touch.

Mailing Address: Texas Instruments, Post Office Box 655303, Dallas, Texas 75265
Copyright © 2007, Texas Instruments Incorporated

IMPORTANT NOTICE

Texas Instruments Incorporated and its subsidiaries (TI) reserve the right to make corrections, modifications, enhancements, improvements, and other changes to its products and services at any time and to discontinue any product or service without notice. Customers should obtain the latest relevant information before placing orders and should verify that such information is current and complete. All products are sold subject to TI's terms and conditions of sale supplied at the time of order acknowledgment.

TI warrants performance of its hardware products to the specifications applicable at the time of sale in accordance with TI's standard warranty. Testing and other quality control techniques are used to the extent TI deems necessary to support this warranty. Except where mandated by government requirements, testing of all parameters of each product is not necessarily performed.

TI assumes no liability for applications assistance or customer product design. Customers are responsible for their products and applications using TI components. To minimize the risks associated with customer products and applications, customers should provide adequate design and operating safeguards.

TI does not warrant or represent that any license, either express or implied, is granted under any TI patent right, copyright, mask work right, or other TI intellectual property right relating to any combination, machine, or process in which TI products or services are used. Information published by TI regarding third-party products or services does not constitute a license from TI to use such products or services or a warranty or endorsement thereof. Use of such information may require a license from a third party under the patents or other intellectual property of the third party, or a license from TI under the patents or other intellectual property of TI.

Reproduction of TI information in TI data books or data sheets is permissible only if reproduction is without alteration and is accompanied by all associated warranties, conditions, limitations, and notices. Reproduction of this information with alteration is an unfair and deceptive business practice. TI is not responsible or liable for such altered documentation. Information of third parties may be subject to additional restrictions.

Resale of TI products or services with statements different from or beyond the parameters stated by TI for that product or service voids all express and any implied warranties for the associated TI product or service and is an unfair and deceptive business practice. TI is not responsible or liable for any such statements.

TI products are not authorized for use in safety-critical applications (such as life support) where a failure of the TI product would reasonably be expected to cause severe personal injury or death, unless officers of the parties have executed an agreement specifically governing such use. Buyers represent that they have all necessary expertise in the safety and regulatory ramifications of their applications, and acknowledge and agree that they are solely responsible for all legal, regulatory and safety-related requirements concerning their products and any use of TI products in such safety-critical applications, notwithstanding any applications-related information or support that may be provided by TI. Further, Buyers must fully indemnify TI and its representatives against any damages arising out of the use of TI products in such safety-critical applications.

TI products are neither designed nor intended for use in military/aerospace applications or environments unless the TI products are specifically designated by TI as military-grade or "enhanced plastic." Only products designated by TI as military-grade meet military specifications. Buyers acknowledge and agree that any such use of TI products which TI has not designated as military-grade is solely at the Buyer's risk, and that they are solely responsible for compliance with all legal and regulatory requirements in connection with such use.

TI products are neither designed nor intended for use in automotive applications or environments unless the specific TI products are designated by TI as compliant with ISO/TS 16949 requirements. Buyers acknowledge and agree that, if they use any non-designated products in automotive applications, TI will not be responsible for any failure to meet such requirements.

Following are URLs where you can obtain information on other Texas Instruments products and application solutions:

Products		**Applications**	
Amplifiers	amplifier.ti.com	Audio	www.ti.com/audio
Data Converters	dataconverter.ti.com	Automotive	www.ti.com/automotive
DSP	dsp.ti.com	Broadband	www.ti.com/broadband
Interface	interface.ti.com	Digital Control	www.ti.com/digitalcontrol
Logic	logic.ti.com	Military	www.ti.com/military
Power Mgmt	power.ti.com	Optical Networking	www.ti.com/opticalnetwork
Microcontrollers	microcontroller.ti.com	Security	www.ti.com/security
RFID	www.ti-rfid.com	Telephony	www.ti.com/telephony
Low Power Wireless	www.ti.com/lpw	Video & Imaging	www.ti.com/video
		Wireless	www.ti.com/wireless

Mailing Address: Texas Instruments, Post Office Box 655303, Dallas, Texas 75265
Copyright © 2007, Texas Instruments Incorporated